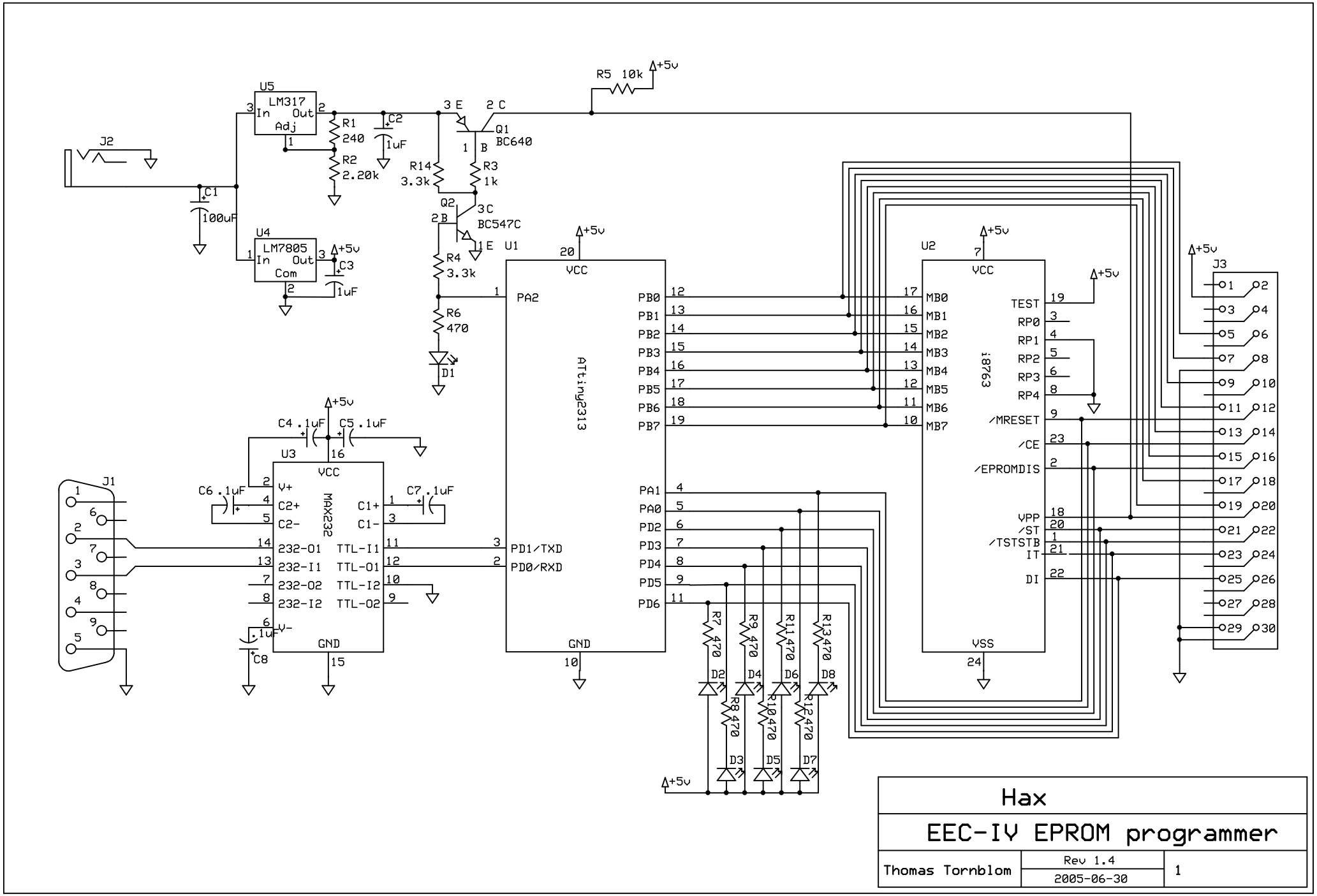
U5
LM317
In
Out
Adj
R1
240
R2
2.20k
C2
1uF
J2
C1
100uF
U4
LM7805
In
Out
Com
C3
1uF
+5v
R5 10k
Q1
BC640
R3
1k
R14
3.3k
Q2
BC547C
R4
3.3k
R6
470
D1
U1
ATtiny2313
VCC
GND
PA2
PB0
PB1
PB2
PB3
PB4
PB5
PB6
PB7
PA1
PA0
PD2
PD3
PD4
PD5
PD6
PD1/TXD
PD0/RXD
U2
i8763
MB0
MB1
MB2
MB3
MB4
MB5
MB6
MB7
TEST
RP0
RP1
RP2
RP3
RP4
/MRESET
/CE
/EPROMDIS
VPP
/ST
/TSTSTB
IT
DI
VSS
J3
C4 .1uF
C5 .1uF
U3
MAX232
V+
C2+
C2-
C1+
C1-
232-O1
232-I1
232-O2
232-I2
TTL-I1
TTL-O1
TTL-I2
TTL-O2
V-
C6 .1uF
C7 .1uF
C8 .1uF
J1
R7 470
R8 470
R9 470
R10 470
R11 470
R12 470
R13 470
D2
D3
D4
D5
D6
D7
D8
Hax
EEC-IV EPROM programmer
Thomas Tornblom
Rev 1.4
2005-06-30
1